University of Glasgow

Lecture 2: ARM Processors + Intro to Interfacing

UESTC 2004: Embedded Processors

Dr Mark D. Butala

Some slides were prepared by Dr Yao Sun, Dr Lina Mohjazi, and Dr Ahmad Taha

University of Glasgow 2013 Glasgow College, UESTC

WORLD CHANGING GLASGOW

A WORLD TOP 100 UNIVERSITY

Piazza for Q&A and Supplemental Resources

- The resource we will use to facilitate Q&A outside of lecture
- NEVER EVER make a “donation” as the service is FREE
- Tell them 我没有钱

Lesson Plan – Lecture 2

Aim

- ARM processor
- STMicroelectronics NUCLEO L432KC
- Review the types of interfaces on the mbed

Learning Objectives

By the end of this lesson you will be able to:

- Learn the concept and history of the ARM processor
- Know the structure and memory mapping of STM NUCLEO L432KC

Assumed Previous Knowledge

- Microelectronics

ARM Processors

ARM – Supported by a kind of *ISA* (Instruction Set Architecture). *ISA* is part of the abstract model of a computer that defines how the CPU is controlled by the software.

ARM: Advanced RISC Machine

What is RISC?

RISC - Reduced Instruction Set Computer/Computing

- ✓ A kind of ISA

CISC - Complex Instruction Set Computer/Computing

- ✓ A kind of ISA

ARM Processors

Instruction Set Architecture

- In simple words, the ISA is defined as group of commands and features for data transfer (registers), operations (arithmetic, logical, branching), and machine control used by the software to communicate with the hardware.

- It is the foundation of Low-level programming (low-level structure) acting as the bridge between software (programming languages) and the underlying hardware.

What does this mean? 😵‍💫

Low level language

VS

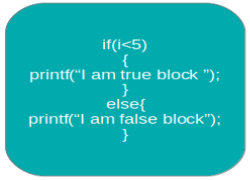

High level language

ARM Processors

Instruction Set Architecture

- High Level languages vs low Level languages

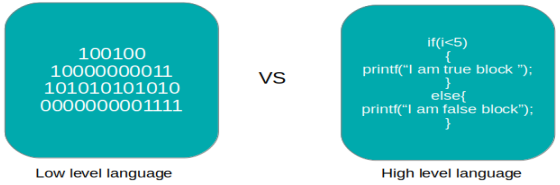

High level language:

- Human-friendly, easy to understand and learn by any programmer
- Straightforward for a programmer to convert an algorithm into program code.

Low level language:

- Machine-friendly, difficult to understand and learn by any human.
- Commands or functions that are structurally similar to processor's instructions.
- Close to the hardware

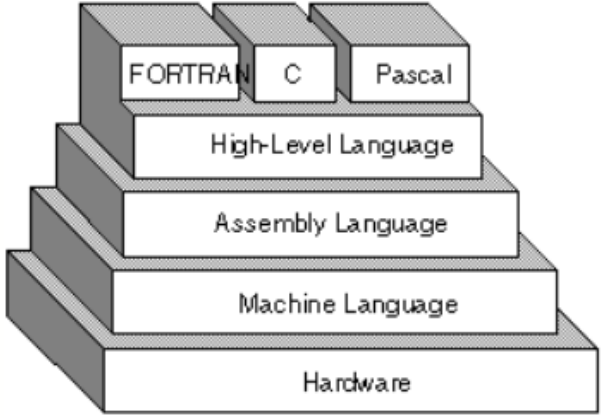

ARM Processors

- A processor will usually fall under one of two categories *CISC* or *RISC*.
- In a *RISC* processor <u>one</u> cycle per instruction is used at the cost of the number of instructions per program (not necessarily true for modern RISC processors, including the pipelined STM32 series).

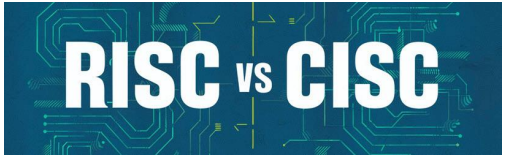

- Example: Adding two 8-bit numbers
  - *RISC*: Load command to load the register with the data -> '+' operator is used -> Store the result in the target location.
  - *CISC*: A single command/instruction like ADD will be used.
- *RISC* processors have **<u>simpler hardware</u>** (fewer transistors needed) compared to *CISC* ones.

What does this mean? 😵

ARM Processors

- *RISC* characteristics:
  - Simpler instructions which require one clock cycle each.
  - More general-purpose registers. **Why?**
  - Emphasis is on the software.
  - Simple addressing modes and fewer data types.

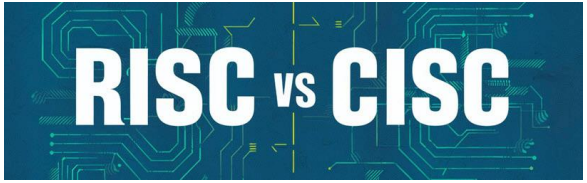

- *CISC* characteristics:
  - Complex instructions.
  - Instruction may take more than a single clock cycle to get executed.
  - Less number of general-purpose registers as operations get performed in memory.
  - Complex addressing modes and more data types.
  - Emphasis is on the hardware.

ARM Processors

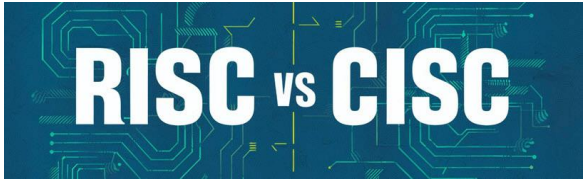

- Advantages:
  - Lower power consumption.
  - Some complexities can be pushed to software (compiler)
- Disadvantages:
  - More instructions, hence more lines of code.
  - Increased memory usage to store the additional instructions.

- Advantages:
  - Reduced code size.
  - More memory efficient.
- Disadvantages:
  - More complex hardware design.
  - Higher power consumption.

ARM Processors

ARM: Advanced RISC Machine

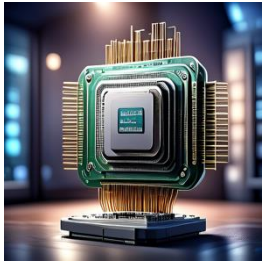

- A family of CPUs used in music players, smartphones, wearables, tablets and the other consumer electronic devices.
- It requires a few instructions sets and transistors.
- Small in size – hence perfect for small-sized devices.

Why?

Origins of the ARM Processors

Acorn

- 1981: The BBC invited the computer firms to supply a computer to be used in educational projects.
- Acorn Computers Ltd were the winners and they developed a home computer using the 8-bit 6502 microcontroller.
- Intels's 16-bit 8088 processor (1980s) made Acorn's 8-bit system less competitive.
- Acorn decided to develop its own processor architecture for better performance.

Origins of the ARM Processors

- In 1990 Acorn partnered with Apple & VLSI Technology to form *ARM Ltd*.
- Apple provided funding, VLSI contributed technology, and Acorn supplied engineers.
- ARM became a £26.6 million company with net income of £2.9 million. (today: nearly $1 billion net income)
- ARM licenses processor designs to chip manufacturers who integrate the core ARM processor with their own peripherals to end up in a complete microcontroller chip.
- Companies that use ARM core processors include Apple, Atmel, Nvidia, NXP, Samsung Electronics, Texas Instruments, and others.

ARM's Impact

- 32-bit (for over 20 years) & 64-bit (more recently) designs used in mobile, IoT, and embedded systems.

- 2005: 98% of mobile phones contained at least one ARM processor.

- 2013: Over 10 billion ARM-based chips produced.

- Known for high performance per watt & cost efficiency, making it the leading choice in embedded computing.

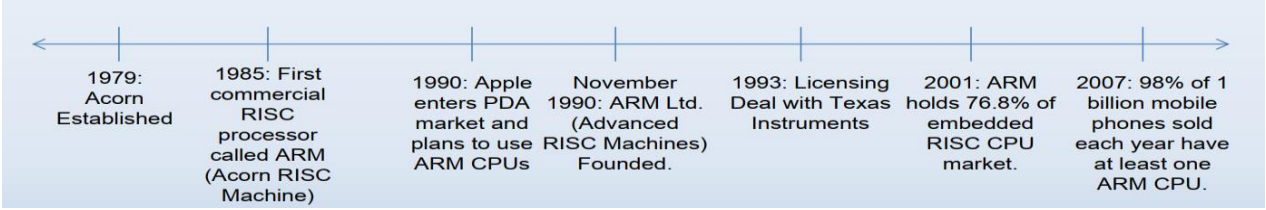

ARM's Impact

ARM architecture versions

Example ARM component	Architecture Generation	Example Application	Approximate date of introduction
ARM1	ARMv1	Acorn Computer in internal testing	1985
ARM2	ARMv2	Acorn Archimedes (Macintosh-era PC)	1987
ARM6	ARMv3	Apple Newton MessagePad 100 series	1994
ARM7TDMI	ARMv4	Game Boy Advance, Nintendo DS*, iPod	2001
ARM9E	ARMv5	Nintendo DS*, Nokia N-Gage, Airport Extreme N basestation	2004
ARM11	ARMv6	iPhone, iPhone 3G, iPod touch	2007
Cortex-A8	ARMv7	Palm Pre, iPhone 3GS	2009

** Nintendo DS incorporates both processors for different uses.*

ARM is a Leading provider of 32-bit embedded RISC microprocessors and reaches more than 75% of market.

ARM's Impact

ARM Partnerships

Why ARM?

- The choice of a MCU for an application depends on many factors, including: Cost, speed, power consumption, size, # GPIOs, memory sizes, special buses, e.g., controller area network (CAN, specialized sensor data bus), interrupt support, and so on.

- Example: A battery-powered portable device would require high clock speed and long battery life vs a heating control system where speed might not be a deciding factor.

- As the clock speed goes up the power consumption does to!

So?

The ARM Processor Family

- The ARM processors are divided between the classic ARM processors and the newer Cortex processor product range.

- The Cortex family consists of three processor families: **Cortex-M**, Cortex-R, and Cortex-A.

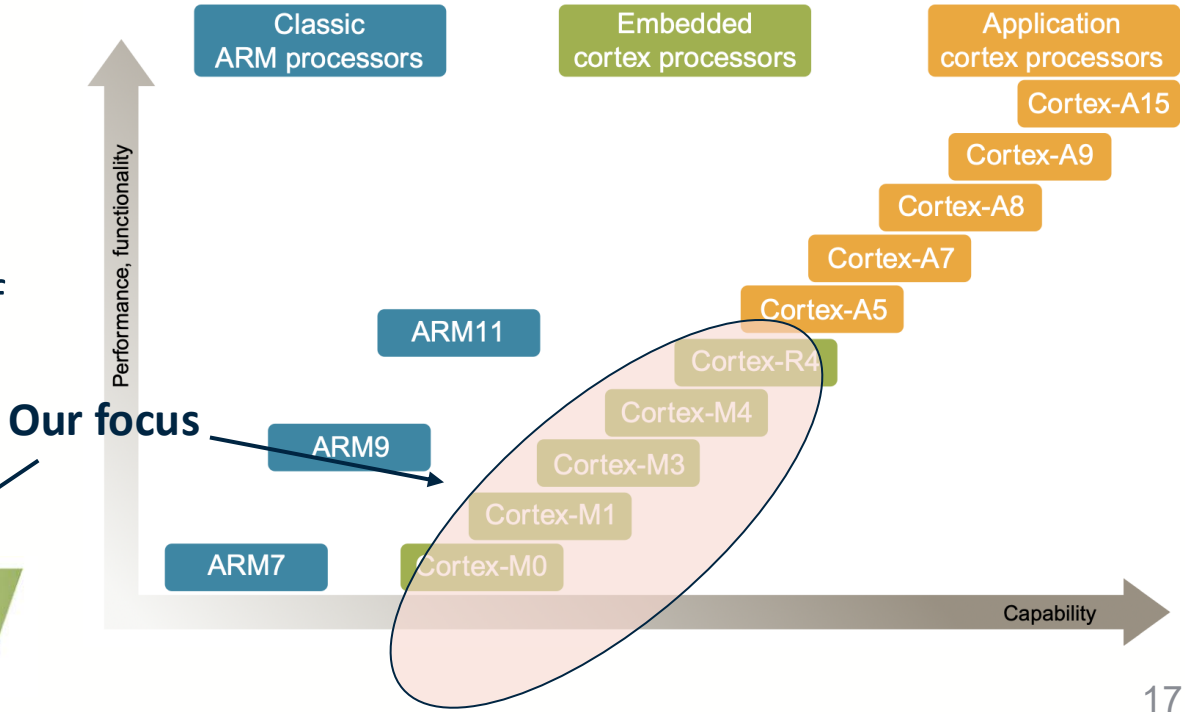

The ARM Processor Family

- ARM processors can be further divided into three groups based on the application spaces:

1. Application processors: High-end processors for mobile computing, smart phone, servers (CLK > 1GHz).
2. Real-time Processors: A high-performance processors for real-time applications such as wireless comms (200MHz – 1 GHz).
3. Microcontroller Processors: microcontroller and embedded systems market (mostly lower frequency).

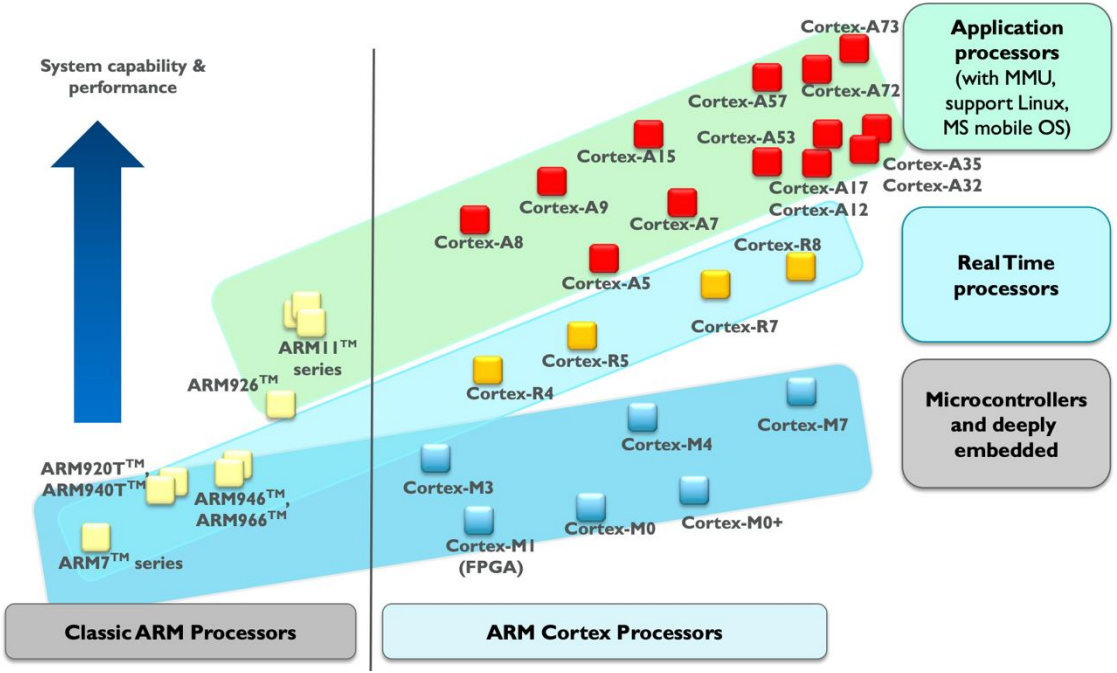

The ARM Processor Family

ARM Cortex Types

Cortex - A

Highest performance

Optimised for
rich operating systems

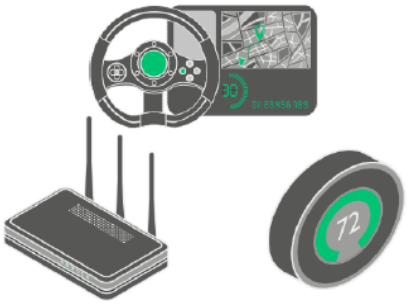

Cortex - R

Fast response

Optimised for
high performance,
hard real-time applications

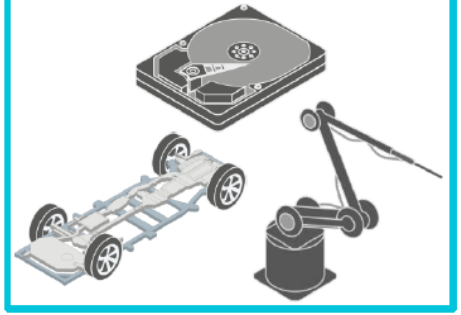

Cortex - M

Smallest/lowest power

Optimised for
discrete processing and
microcontrollers

The ARM Processor Family

The Key Characteristics of the Three Processor Ranges

	Application processors	Real-time processors	Microcontroller processors
Design	High clock frequency, Long pipeline, High performance, Multimedia support (NEON instruction set extension)	High clock frequency, Long to medium pipeline length, Deterministic (low interrupt latency)	Short pipeline, ultra low power, Deterministic (low interrupt latency)
System features	Memory Management Unit (MMU), cache memory, ARM TrustZone® security extension	Memory Protection Unit (MPU), cache memory, Tightly Coupled Memory (TCM)	Memory Protection Unit (MPU), Nested Vectored Interrupt Controller (NVIC), Wakeup Interrupt Controller (WIC)
Targeted markets	Mobile computing, smart phones, energy-efficient servers, high-end microprocessors	Industrial microcontrollers, automotives, Hard disk controllers, Baseband modem	Microcontrollers, Deeply embedded systems (e.g. sensors, MEMS, mixed signal IC), Internet of Things (IoT)

The ARM Processor Family Cortex-M

- Designed for microcontrollers – Low power, low cost, high efficiency.
- Cortex-M0 & Cortex-M0+ (ARMv6-M) – Small, ultra-low power (9.85–12.5 µW/MHz), ideal for cost-sensitive applications.
- Cortex-M3 & Cortex-M4 (ARMv7-M) – Higher performance, same Thumb-2 instruction set (a subset of the commonly used 32-bit ARM instructions).
- Cortex-M4 adds DSP & optional Floating Point Unit (FPU) – Ideal for IoT & wearables.

	Descriptions
Cortex-M0	A very small processor (starting from 12K gates) for low cost, ultra low power microcontrollers and deeply embedded applications
Cortex-M0+	The most energy-efficient processor for small embedded system. Similar size and programmer's model to the Cortex-M0 processor, but with additional features like single cycle I/O interface and vector table relocations
Cortex-M1	A small processor design optimized for FPGA designs and provides Tightly Coupled

The ARM Processor Family Cortex-M

- Cortex-M7 – Highest performance in the series, supports fast DSP & advanced floating point operations.
- Balance between power efficiency & performance for embedded applications.

	Descriptions
Cortex-M3	A small but powerful embedded processor for low-power microcontrollers that has a rich instruction set to enable it to handle complex tasks quicker. It has a hardware divider and Multiply-Accumulate (MAC) instructions. In addition, it also has comprehensive debug and trace features to enable software developers to develop their applications quicker
Cortex-M4	It provides all the features on the Cortex-M3, with additional instructions target at Digital Signal Processing (DSP) tasks, such as Single Instruction Multiple Data (SIMD) and faster single cycle MAC operations. In addition, it also have an optional single precision floating point unit that support IEEE 754 floating point standard
Cortex-M7	High-performance processor for high-end microcontrollers and processing intensive applications. It has all the ISA features available in Cortex-M4, with additional support for double-precision floating point, as well as additional memory features like cache and Tightly Coupled Memory (TCM)

The ARM Processor Family Performance Measurement

- Processor performance is usually measured using benchmark programs.

- Nowadays, CoreMark is one of the most commonly used benchmark programs used to indicate the processor performance.
- *"Coremark contains implementations of the following algorithms: list processing (find and sort), matrix manipulation (common matrix operations), state machine (determine if an input stream contains valid numbers), and CRC (cyclic redundancy check). It is designed to run on devices from 8-bit microcontrollers to 64-bit microprocessors"*

Processor	CoreMark/MHz
Cortex-M7	5.01
Cortex-A9	4.15
Cortex-M4	3.40
Cortex-M3	3.32
Cortex-M0+	2.49
Cortex-M0	2.33
dsPIC33	1.89
MSP430	1.11
PIC24	1.88
PIC18	0.04

Intel vs ARM vs MIPS

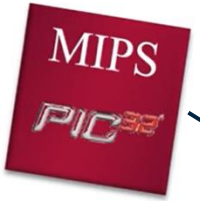

Intel company
Design and manufacture

Designed and introduced by MIPS Technologies (but they completely switched to RISC-V in 2021)

Design: ARM company
Manufacture: Qualcomm, Samsung, MediaTek, etc.

Intel vs ARM

ARM vs. Intel x86

- Silicon space
  - ARM: small x86: large
- Power/energy consumption
  - ARM: low x86: high
- Battery life
  - ARM: long x86: short
- Performance
  - ARM: low x86: high
- ISA
  - ARM: RISC x86: CISC

Goal:

x86 traditionally targets peak performance, ARM targets energy efficiency

Applications:

ARM is more suitable for an embedded system

x86 is more likely for general purpose computers.

ARM vs MIPS

ARM vs. MIPS

- Two different ISAs in the family of RISC.
- ARM has only 16 registers while MIPS has 32 registers.
- ARM has a high throughput and a great efficiency because of supporting 64-bit data buses.

Conclusion:

✓ MIPS is implemented primarily in embedded systems.

✓ At present, ARM is more popular in the industry than MIPS.

ARM vs RISC-V

ARM vs. RISC-V

- Two different ISAs in the family of RISC.
- ARM licensing fees are expensive ($85k / year for smaller companies, >$1 million for large companies). They also take 1% to 2% royalty!
- RISC-V (5th generation UC Berkeley processor) is free and open.

Conclusion:

✓ ARM will remain a prominent player.

✓ RISC-V is “the Linux of hardware” and is building momentum.

STM32 ARM core-based MCUs

- ***Remember:*** ARM licenses processor designs to chip manufacturers who integrate the core ARM processor with their own peripherals to end up in a complete microcontroller chip.
- ***STMicroelectronics*** are an example!
- They have multiple 32-bit ARM-based microcontroller families, including the ***STM32***, *STR7 and STR9* families.

How do different ST families differ from one another?

- Each of these families have sub-families. For the STM32 we have the *STM32L0, STM32L1,* ***STM32L4****, STM32L4+*, and others.

STM32 ARM core-based MCUs STM32L432xx

- In UESTC 1008 and UESTC 2004 we use the NUCLEO L432KC development board which is based on an STM32 chip, particularly the STM32L4 (*Click Me*) sub-family (which has further sub-sub-families).

- We also have the an L432KB which only differs in the flash memory size (*Click Me*).

- What does ***STM32 L 432 K B/C*** denote? ->

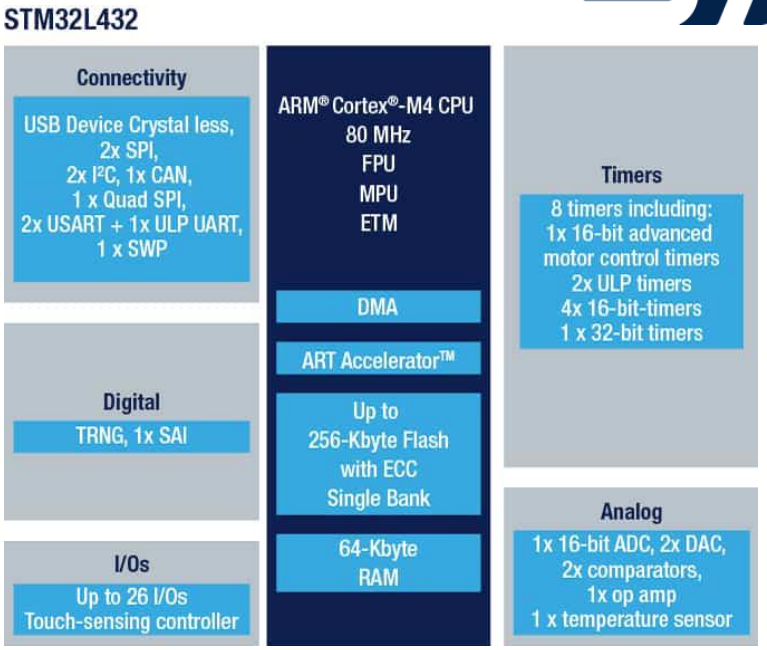

STM32 ARM core-based MCUs STM32L432xx

- In UESTC 1008 and UESTC 2004 we use the NUCLEO L432KC development board which is based on an STM32 chip, particularly the STM32L4 (*Click Me*) sub-family (which has further sub-sub-families).

- We also have the an L432KB which only differs in the flash memory size (*Click Me*)

- What does ***STM32 L 432 K B/C*** denote? ->

Example: STM32 L 432 K C

Device family

STM32 = Arm® based 32-bit microcontroller

Product type

L = ultra-low-power

Device subfamily

432: STM32L432xx

Pin count

K = 32 pins

Flash memory size

B = 128 kB of Flash memory

C = 256 KB of Flash memory

NUCLEO L432KC

Structure of Nucleo Board - L432KC

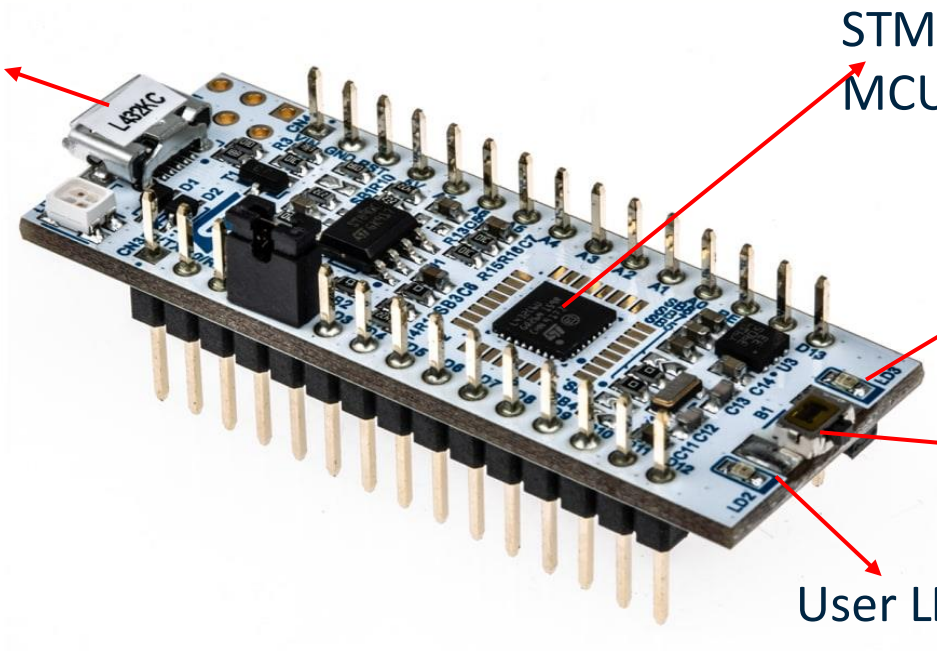

What's Inside?

Note:

- Different videos have been stitched together
- You cannot see (in visible light) the structures at the smallest scales

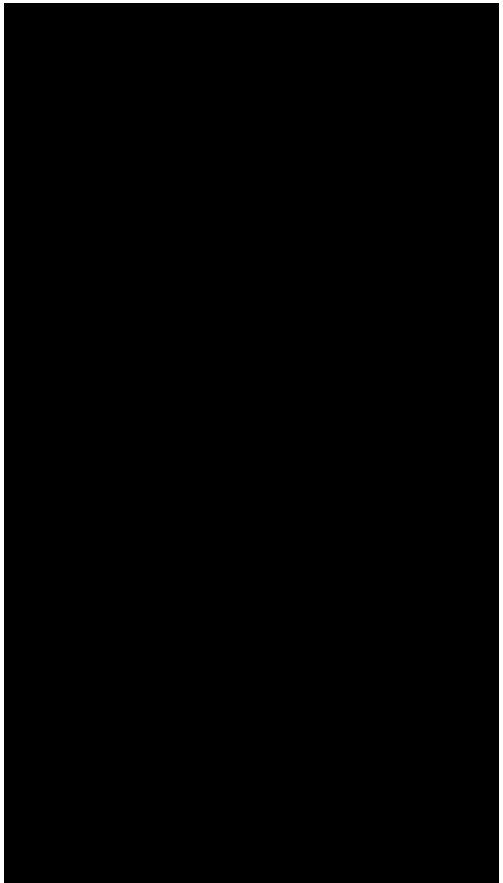

NUCLEO L432KC

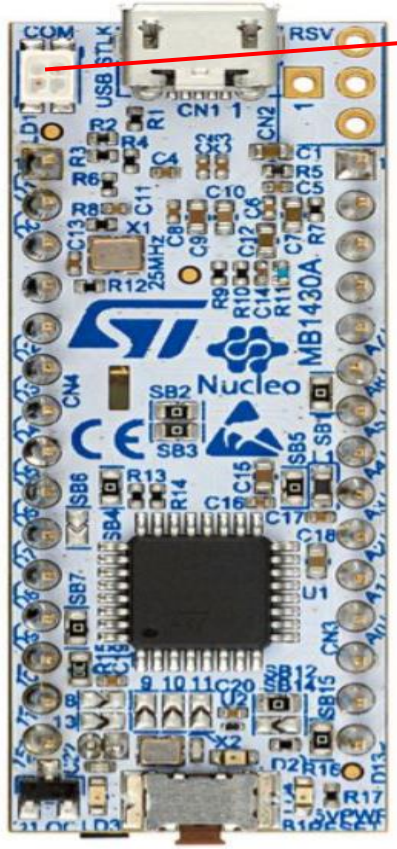

ST-Link COM LED State

1. Blinking Red
First USB enumeration with PC taking place

2. Red
Communication between PC and ST-LINK is established (end of enumeration)

3. Blinking Green & Red Alternately
Data is being exchanged between the PC and target

4. Green
Last communication has been successful

5. Orange
Last communication was failed

NUCLEO L432KC

PIN Diagram

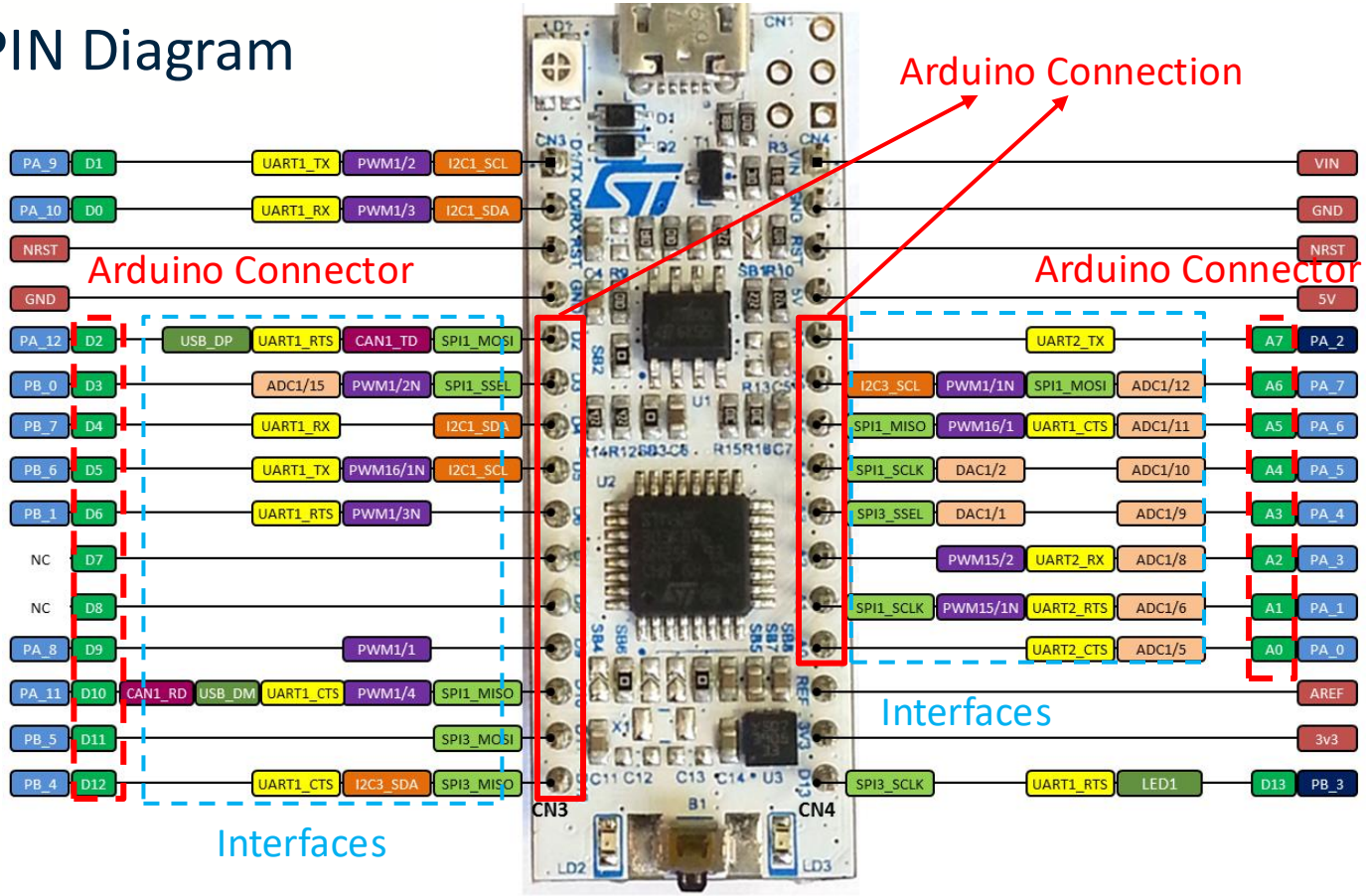

STM32L4 vs. Arduino UNO

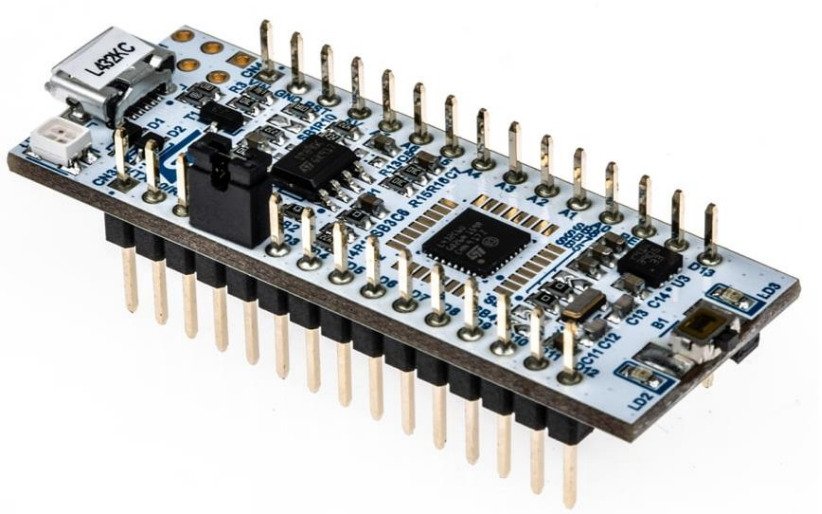

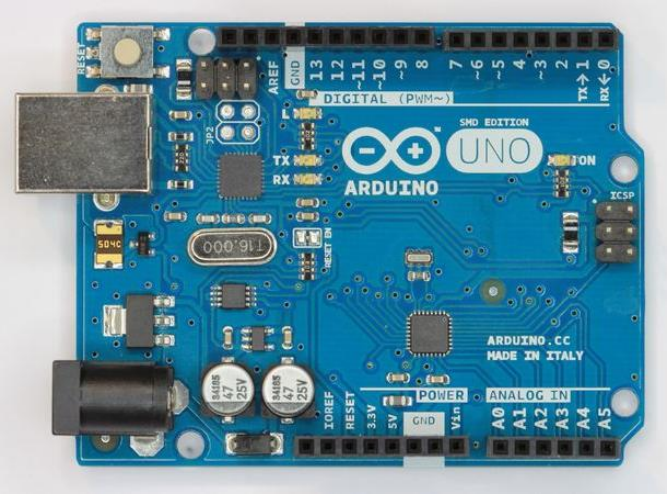

STM32L4 vs. Arduino UNO

Feature	ATmega328P (8-bit)	STM32L4 Series (32-bit)
Clock Speed	Up to 20 MHz	Up to 80 MHz
Flash (Storage)	32 KB	Up to 1 MB
RAM	2 KB	Up to 320 KB
Voltage	1.8V to 5V (Standard)	1.71V to 3.6V (3.3V Native)
Math Power	Basic (no floating point unit)	FPU and DSP (calculates math 10-100x faster)
ADC Resolution	10-bit	12-bit
USB Support	None (Needs extra chip)	Native USB support on many models

NUCLEO L432KC

Features Nucleo L432KC:

- An affordable and flexible way for users to try out new ideas and build prototypes
- The Arduino connectivity support
- The STM32 Nucleo board integrates the ST-LINK/V2-1 debugger/programmer.
- ARM®32-bit Cortex®-M4 CPU

https://os.mbed.com/platforms/ST-Nucleo-L432KC/

https://www.st.com/en/product/nucleo-l432kc

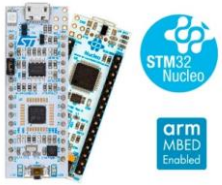

Microcontroller features

- STM32L432KC in UFQFPN32 package
- ARM®32-bit Cortex®-M4 CPU
- 80 MHz max CPU frequency
- VDD from 1.65 V to 3.6 V
- 256 KB Flash
- 64 KB SRAM
- Timers General Purpose (4)
- SPI/I2S (2)
- I2C (2)
- USART (2)
- 12-bit ADC with 10 channels (1)
- GPIO (20) with external interrupt capability
- RTC

Memory Mapping

- Types of memories you studied in UESTC 1008.
- Memory mapping is a technique used in microcontrollers to manage and allocate memory resources efficiently.
- Memory addresses are assigned to various hardware components or memory regions, such as RAM, ROM, and external devices like flash memory or peripherals.

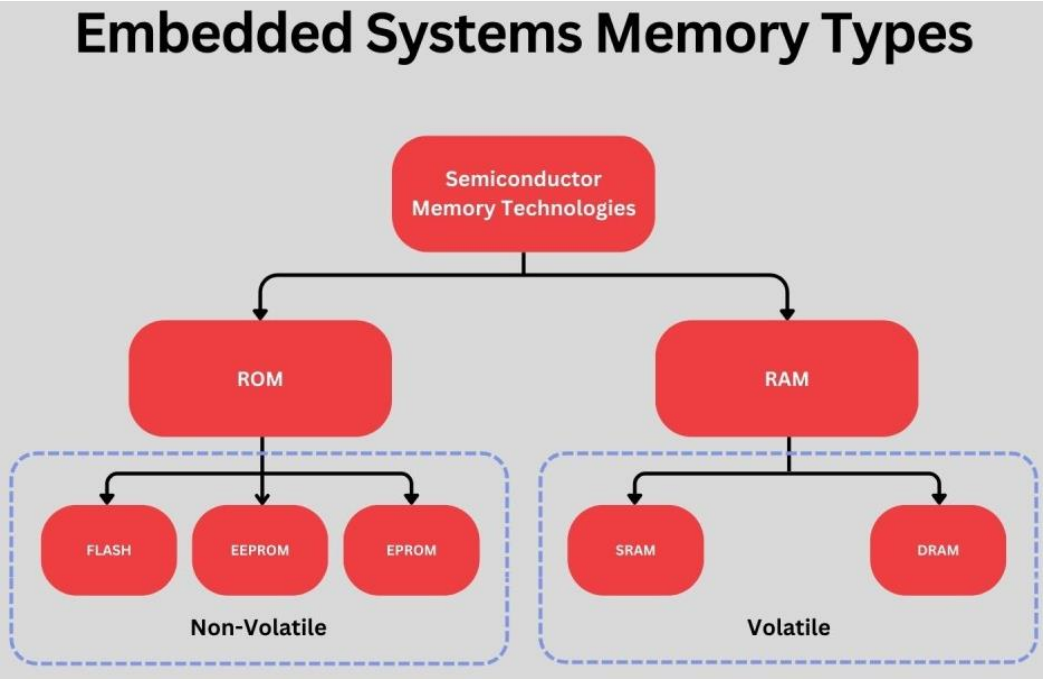

Memory Mapping – Cortex M4

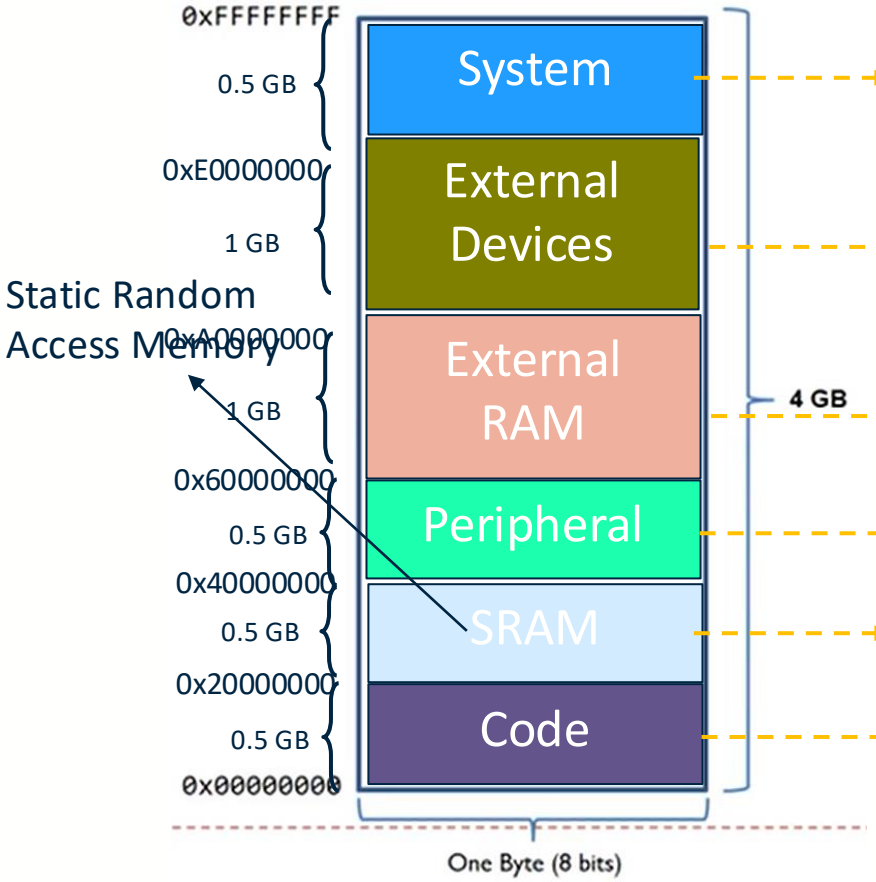

Uses to access system components such as System Tick Timer, Nested Vectored Interrupt Controller (NVIC), etc.

External SRAM/Flash connected to the MCU through dedicated memory interfaces, allowing the Cortex-M4 to access additional data storage beyond its on-chip memory.

Off-chip memory for data (larger data storage capacity at a lower cost).

Memory-mapped I/O – Allows on-chip peripherals to be accessed directly using memory access instructions

On-chip SRAM for fast data access, temporary storage because it is volatile.

On-chip flash for programme code

Memory Mapping – Cortex M4

Conclusion:

- Basically, there are 4 GB size with 6 memory regions/sections;
  - Code region – 0.5 GB
  - SRAM – 0.5 GB
  - Peripheral – 0.5 GB
  - External Devices – 1 GB
  - External RAM – 1 GB
  - System – 0.5 GB
- The memory mapping can be different for the different processor serials

GPIOs

What is GPIO? 😮

- GPIO - General Purpose Input Output
- A set of pins in the microcontroller, which functions by passing data into and out of the board.
- They serve as a bidirectional pin, either as an input or output pin, or it also serves as an alternate functionality pin.
- Customized – serial bus, ADC/DAC
- Controlled by software

GPIOs

Structure of a GPIO port bit

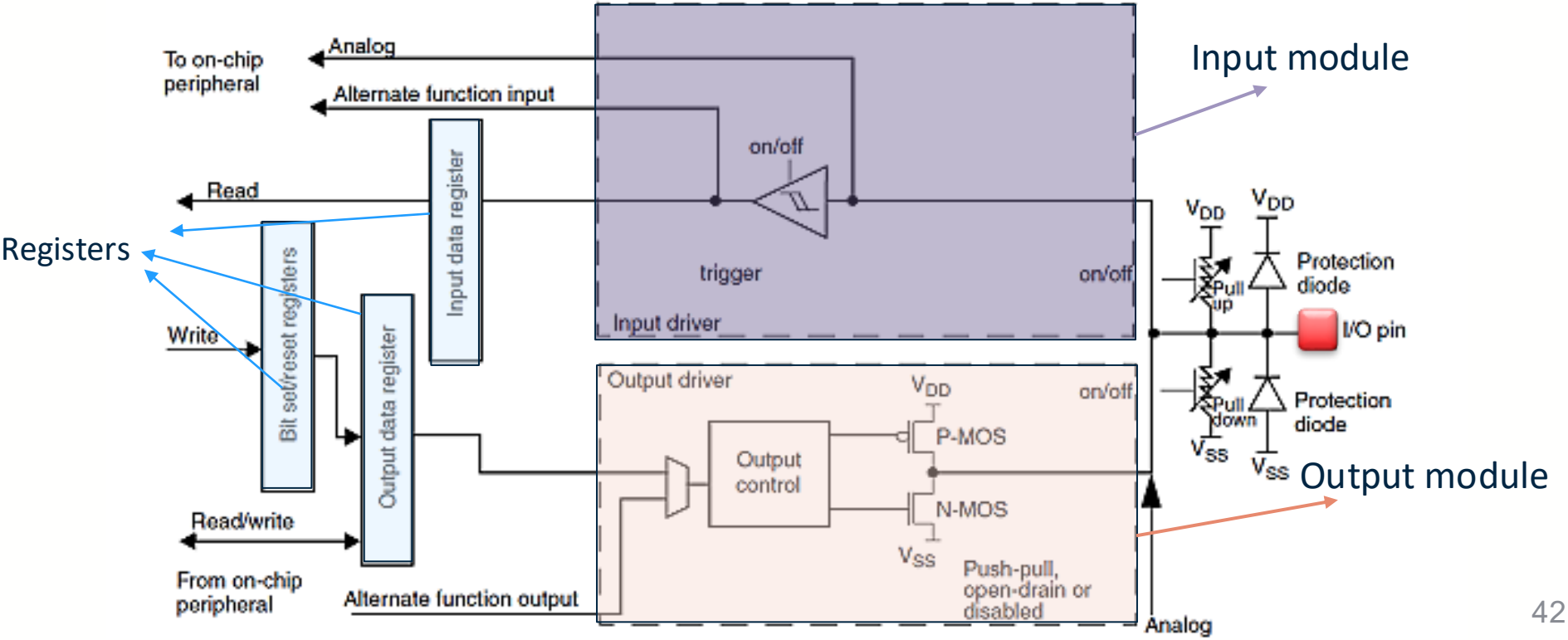

GPIOs

Eight working modes:

- 4 Input modes: Floating Input (No Pull-up/down), Pull-up, Pull-down, Analog mode
- 4 Output modes
  - General purpose output **push-pull**: The pin can actively drive a signal both high and low, meaning it can "push" the signal to a high voltage or "pull" it to ground.
  - General purpose output **Open-drain**: It can only pull the output voltage low to ground.
  - **Alternate function** output push-pull or Open-drain: A special mode where one GPIO pin can connect via multiplex to 16 peripherals, like a UART or SPI.

Measurements in DC Circuits – The Digital Multimeter (DMM)

For Reference and Self-Study

I can go over this quickly in the lecture if there is time and if you have any questions.

Measurements in DC Circuits – The Digital Multimeter (DMM)

- Digital Multimeter

Reading displayed digitally.

Multiple parameters

A measurement device

Measurements in DC Circuits – The Digital Multimeter (DMM)

- Digital Multimeter

Reading displayed digitally.

Multiple parameters

A measurement device

Measurement Probes/Test Leads

Reading

Measurement /Range Selector

10A range

Volts / Ohms /mA

Common Terminal

Voltage Measurement – DMM as a Voltmeter

- How do you think voltage is to be measured across the resistor R2 in this circuit?
  - We have a DMM and two probes a black and a red.
- Voltmeters have very high input resistance. What does this mean?

- It means it doesn't draw any current i.e., open circuit.

No Impact on the Circuit !!!

- Voltage is potential difference so probes should be connected, one at point 4 and the other at point 5. Where is the **red** connected?

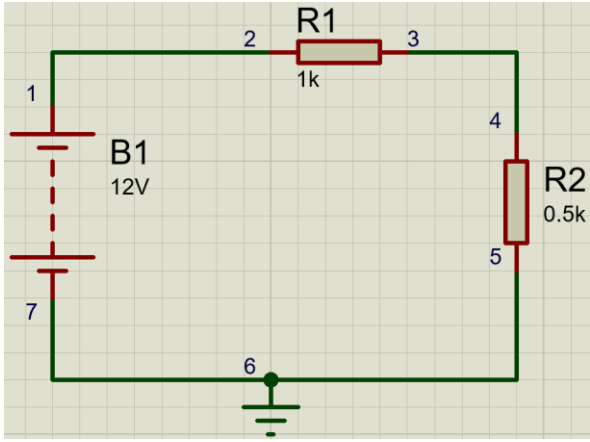

Voltage Measurement – DMM as a Voltmeter

- The **red** is connected to the terminal with high potential i.e. where the current first enters. The **black** is connected to the other terminal with lower potential i.e. where the current is going towards.

- What happens if we reverse the connection of the DMM?

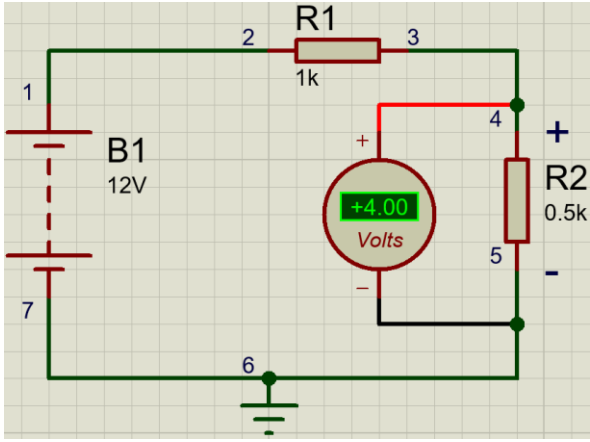

Voltage Measurement – DMM as a Voltmeter

- Nothing wrong with it, all what will happen will be a reverse in the polarity.

- According to your design/calculations, you need to be careful when accounting for the “-4 V”.

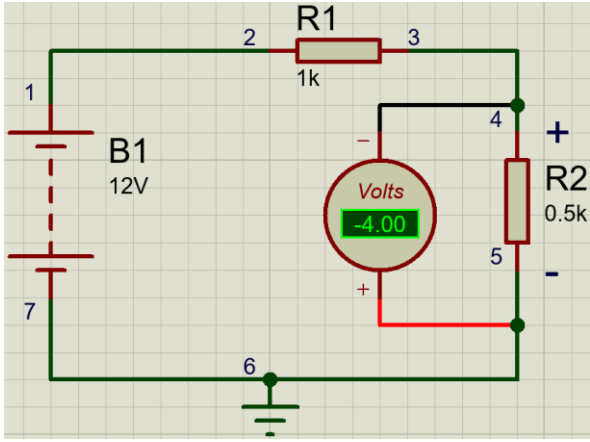

Voltage Measurement – DMM as a Voltmeter

- Key points:

- Voltage is measured using a DMM by adjusting the knob to point to DC voltage (DCV).

- The **red** probe is connected to the "**+**" terminal of the circuit element and the **black** to the "**-**" terminal.

- Voltage measurement is performed by connecting the voltmeter in <u>parallel</u>.

Current Measurement – DMM as a Ammeter

- How do you think current through the resistor R2 is to be measured in this circuit?
  - We have the same DMM and two probes a black and a red.
- Ammeters have very low input resistance. What does this mean?
- It means it doesn't develop any voltage across it, i.e. short circuit. **No Impact on the Circuit !!!**
- We are measuring current <u>flow</u>, so we need current to flow through the ammeter, i.e. device connected <u>between</u> points 3 and 4. Where is the red connected?

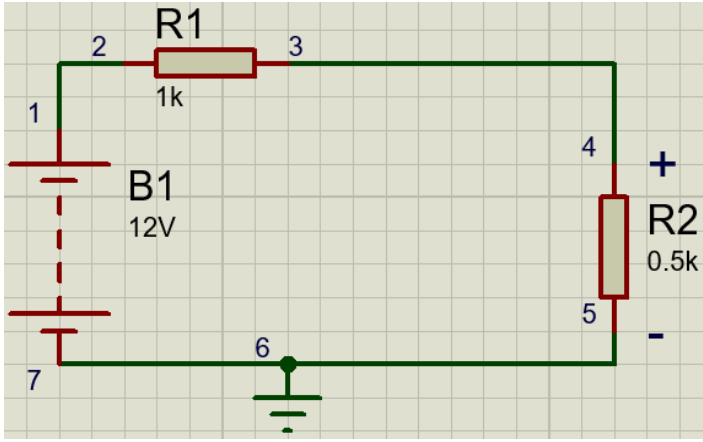

Voltage Measurement – DMM as a Voltmeter

- The **red** probe meets the current i.e. where the current first enters. The **black** probe then closes the loop again.

- What happens if we reverse the connection of the DMM?

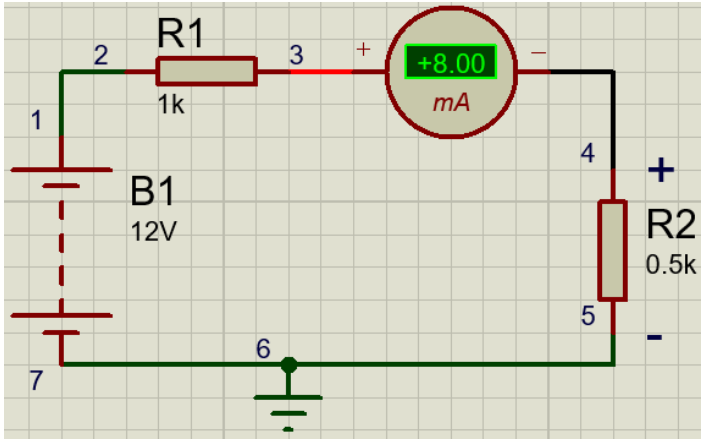

Voltage Measurement – DMM as a Voltmeter

- Nothing wrong with it, all what will happen will be a reverse in the direction sign.

- According to your design/calculations, you need to be careful when accounting for the “-8 mA”.

- Now can we still measure the same current but by changing the position of the DMM?

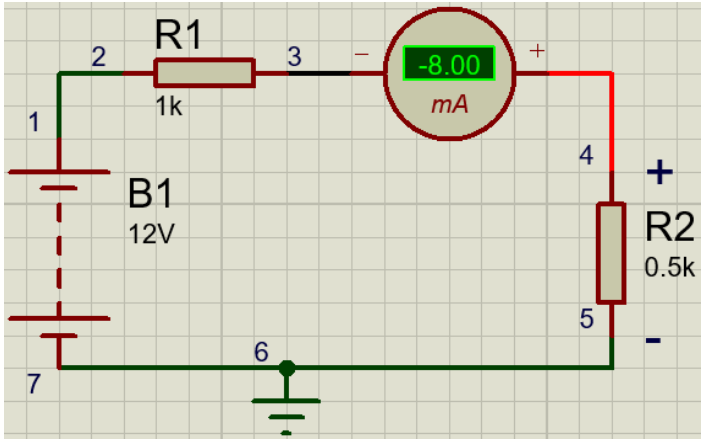

Voltage Measurement – DMM as a Voltmeter

- Yes we can change its location. But where?
  - It must always remain in ***series*** with the ***load***!

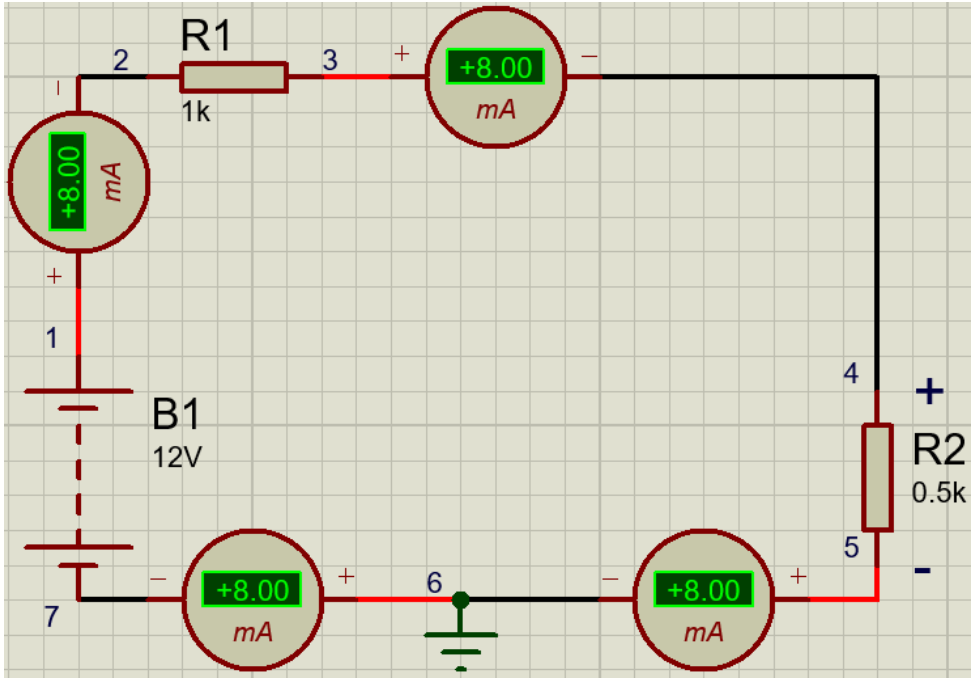

Oscilloscopes

- Oscilloscopes are used to measure parameters that can not be measured with a multimeter.
- They are used to view fast changes in voltage (AC signals).
- They can also be used in DC circuits in embedded systems, to visually analyse voltage levels at different points in the circuit. Uncovering issues like unexpected voltage drops, excessive noise, or incorrect power supply regulation, even though the signal is considered "DC" due to its ability to measure very slow changes in voltage over time.
- They essentially act as a very sensitive voltmeter with waveform visualisation capabilities.

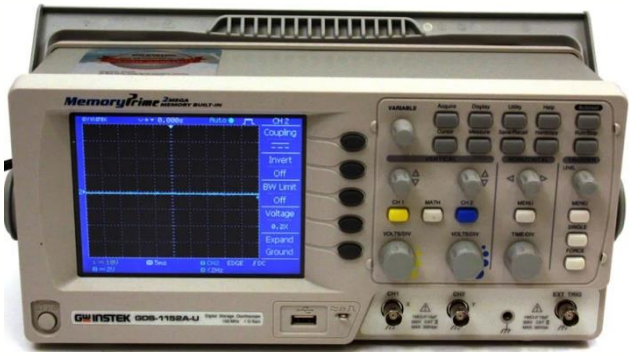

More on debugging tools with Dr Sajjad Hussain (weeks 9 and 10) and more on the oscilloscope in the lab.

University of Glasgow

University of Glasgow 2013 Glasgow College, UESTC

WORLD CHANGING GLASGOW

Summary

- ARM Processor
- Mbed NUCLEO L432KC
- Types of GPIOs
- Self-study Section:
- Measurements in DC Circuits (Digital Multimeter and Oscilloscope)